CDE2310 Group 9 Turtlebot3 User Guide

1. General System Description & Critical Data

The system is an autonomous mobile robot based on the TurtleBot3 platform, designed to perform exploration, target detection, and projectile deployment within an unknown indoor environment.

The robot uses a layered autonomy architecture integrating:

1. SLAM-based mapping (occupancy grid generation)
2. Frontier-based exploration
3. Nav2 navigation stack
4. ArUco marker-based vision detection
5. Flywheel-based projectile launching mechanism

The robot is capable of:

1. Exploring an unknown map
2. Detecting station targets using ArUco markers
3. Classifying station type (static or dynamic)
4. Aligning and deploying projectiles accurately

Technical Overview

Parameter	**Value**
Robot Platform	Turtlebot3
Battery	11.1V, 1800mAh LiPo
Usable Energy	~14.99 Wh (75% efficiency assumption)
Estimated Runtime	~71.5 minutes
Standard Operating Power	12.21 W
Peak Power (Launching)	24.79 W
Marker Detection Range	< 70 cm
Alignment Accuracy	≤ 3 cm
Obstacle Clearance	20-30 cm

Mechanical Subsystem Overview:

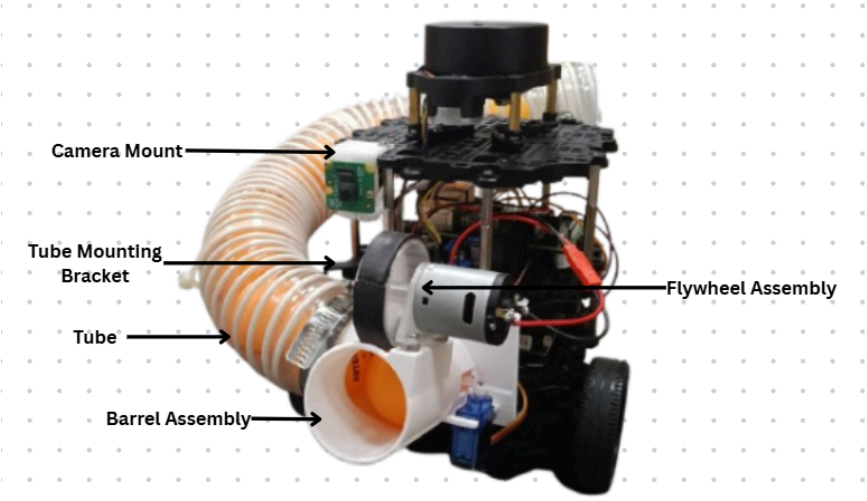

Group 9 TurtleBot3

Electrical Subsystem Overview:

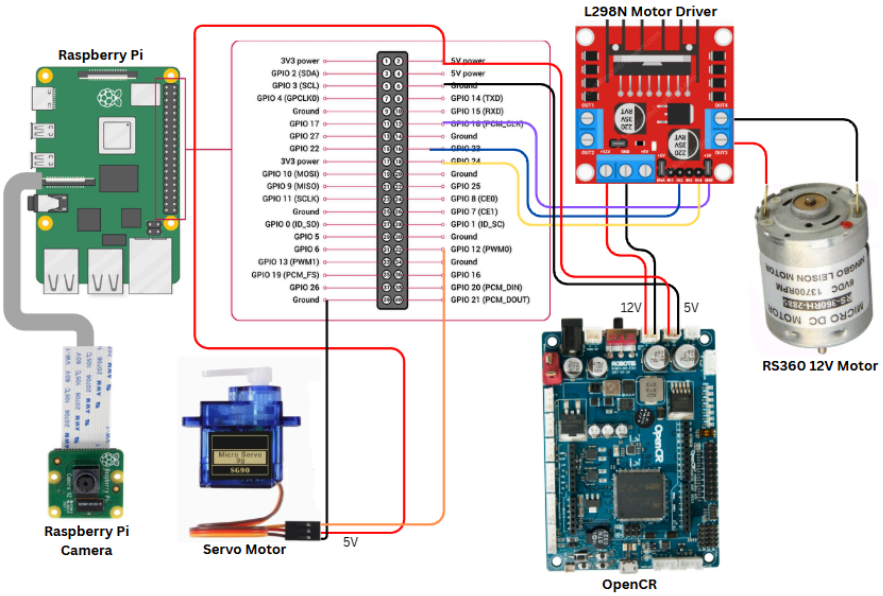

2. Technical Guide

System Purpose

The robot is designed to autonomously complete a mission involving:

- Exploration of unknown terrain
- Detection of station targets
- Intelligent decision-making (static vs dynamic targets)
- Accurate projectile deployment under constraints

Software logic:

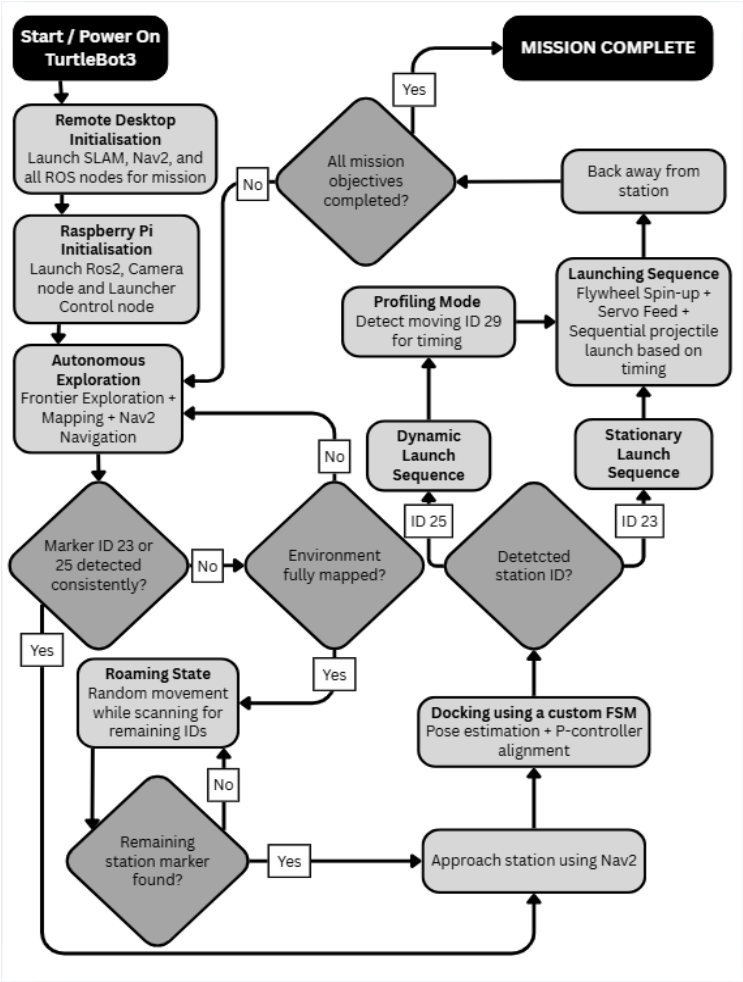

Pre-mission checks:

Hardware Checks

- ☐ Battery fully charged
- ☐ All wiring secured
- ☐ Flywheel rotates correctly
- ☐ Servo actuates properly
- ☐ Tube loaded with balls

Sensor Checks

- ☐ LiDAR publishing /scan
- ☐ Camera feed active
- ☐ ArUco detection working
- ☐ Odometry /odom valid

Software Checks

- ☐ SLAM generating map
- ☐ Nav2 planner is running (check the cost map in SLAM)
- ☐ No ROS errors
- ☐ All nodes successfully launched

Functional Tests

- ☐ Robot moves to the goal
- ☐ Obstacle avoidance working
- ☐ Marker detection sends correct triggers
- ☐ Launcher fires on command

3. Acceptable Defect Log

The following defects are acceptable and do not critically affect mission completion:

Defect	Impact	Acceptibility	Reason for acceptability
Minor localization drift (<3 cm)	Slight navigation error	Acceptable	Very small relative to the robot's size, map resolution, and docking tolerance
Occasional missed marker detection	Delayed response and detecting of stations	Acceptable	Overall software accounts for random motion to search for missed ids post mapping
Slight misalignment	Reduced firing accuracy	Acceptable	Launching mechanism accounts for angled docking
Variable launch trajectory	Minor deviation in hit accuracy	Acceptable	Launching mechanism accounts for angled docking
Map incompleteness in corners	Partial exploration	Acceptable	Overall software accounts for random motion to search for missed ids if exploration not complete

3. Factory Acceptance Test

Test ID	Subsystem	Test Description	Procedure	Expected Result	Pass/Fail
FAT-01	Power System	Verify system powers on	Connect battery and switch on system	All components power up without errors, TurtleBot3 chime should be played	P/F
FAT-02	Power System	Check voltage stability	Measure voltage under load	Voltage remains within safe operating range for each component	P/F
FAT-03	Mobility	Forward/backward motion and turning	Send movement commands	Robot moves smoothly in both directions and rotates accurately without drift	P/F
FAT-04	Mobility	Obstacle avoidance	Place obstacle in path	Robot detects and avoids obstacle	P/F
FAT-05	Camera	Camera initialization	Run camera node/software	Camera feed starts successfully	P/F
FAT-06	Magazine	Ball feeding	Load 10 balls in tube and activate launch sequence	Balls feed one at a time without jamming	P/F
FAT-07	Launcher	Flywheel spin-up	Activate launcher motors and set PWM percentage desired	Flywheels changes rpm with appropriate PWM percentage given	P/F
FAT-08	Launcher	Launch distance consistency	Fire multiple balls	Distance variation within acceptable tolerance per PWM percentage set	P/F
FAT-09	Docking	Docking accuracy	Set up ArUco Marker 25 and launch docking sequence	Docks with a left/right distance <3cm and a forward distance <21cm from the marker	P/F
FAT-10	Calibration	Launcher accuracy	Fire at moving target (ArUco Marker 29)	Hits target within 13cm diameter	P/F
FAT-11	Calibration	Launcher accuracy	Fire at fixed target (ArUco Marker 25)	Hits target within 13cm diameter with a 5s delay between shots when Marker 25 is constantly apparent	P/F
FAT-12	Structural	Mechanical stability	Operate launcher repeatedly	No loose components or structural failure	P/F
FAT-13	Endurance	Continuous operation	Run system for extended period	No performance degradation or failures after 1 hour	P/F